379-000028

ASSEMBLY INSTRUCTIONS

STEP 1

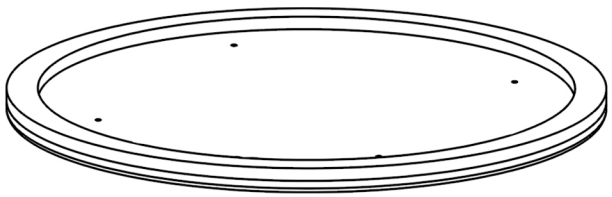

STEP 2

DON'T TIGHTEN BOLTS UNTIL EVERYTHING IN PLACE!

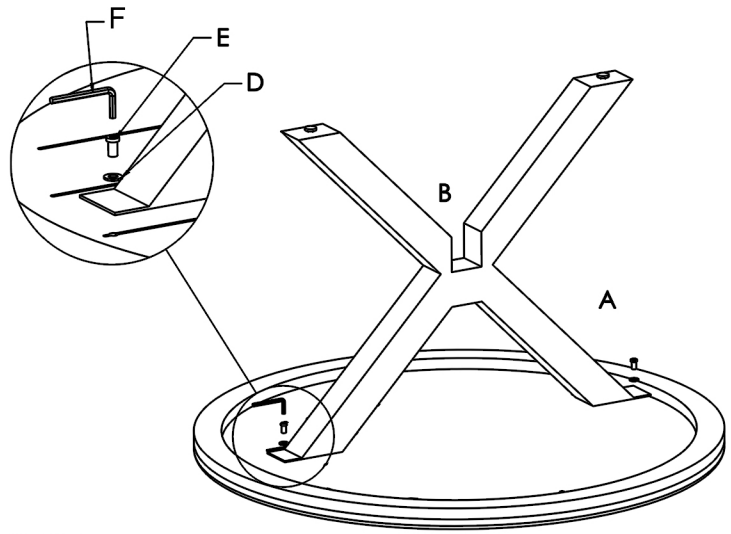

DESCRIPTION : DINING TABLE

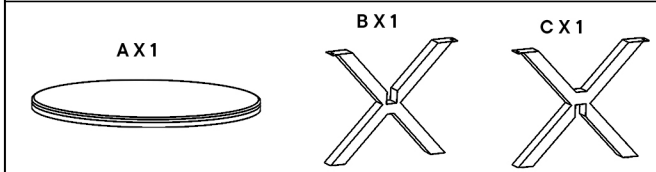

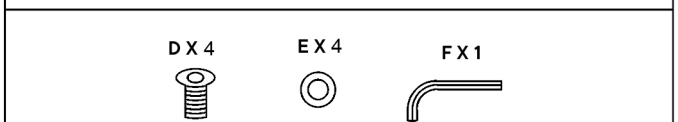

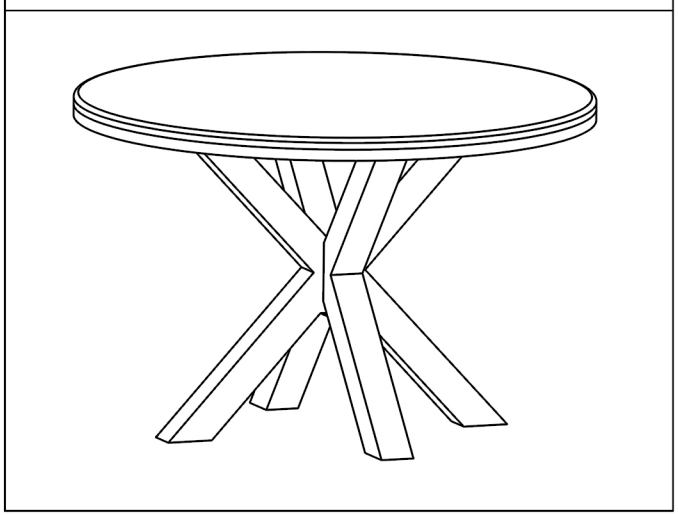

STEP 3

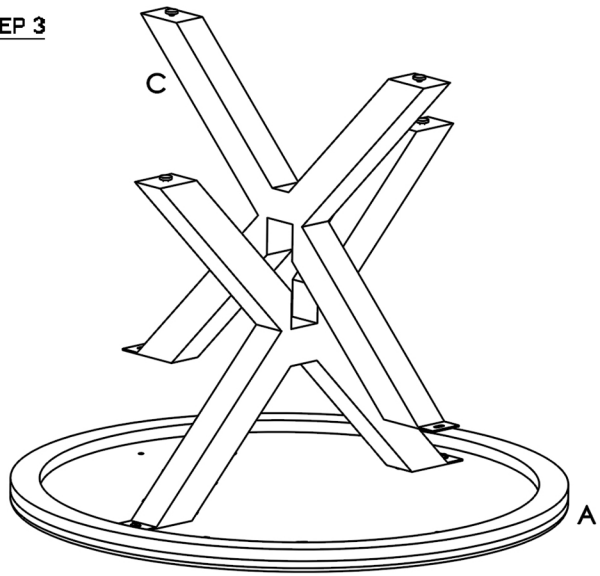

STEP 4

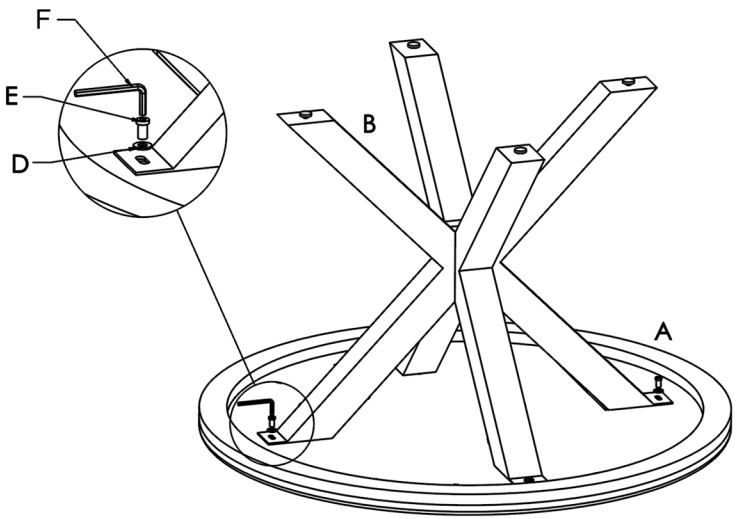

Care Instructions

Wipe with a soft,dry cloth To protect finish , avoid the use of chemicals and household cleaners, any liquid spilled onto the table should be cleaned up immediately with a damp cloth.