069-000

ASSEMBLY INSTRUCTION

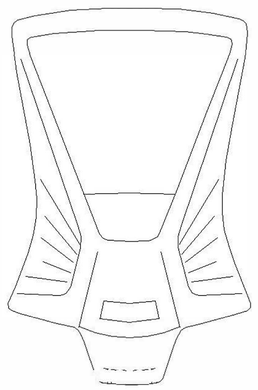

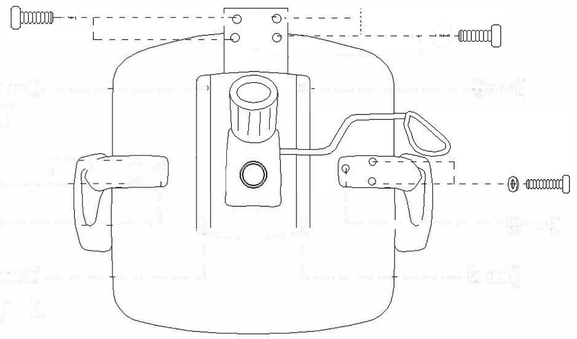

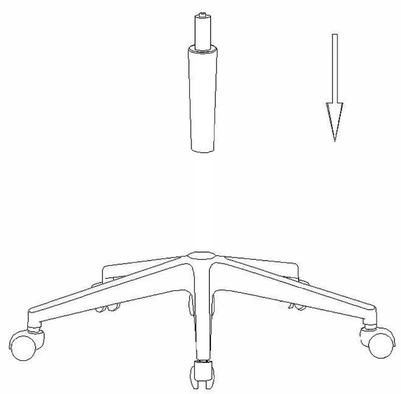

K			D		